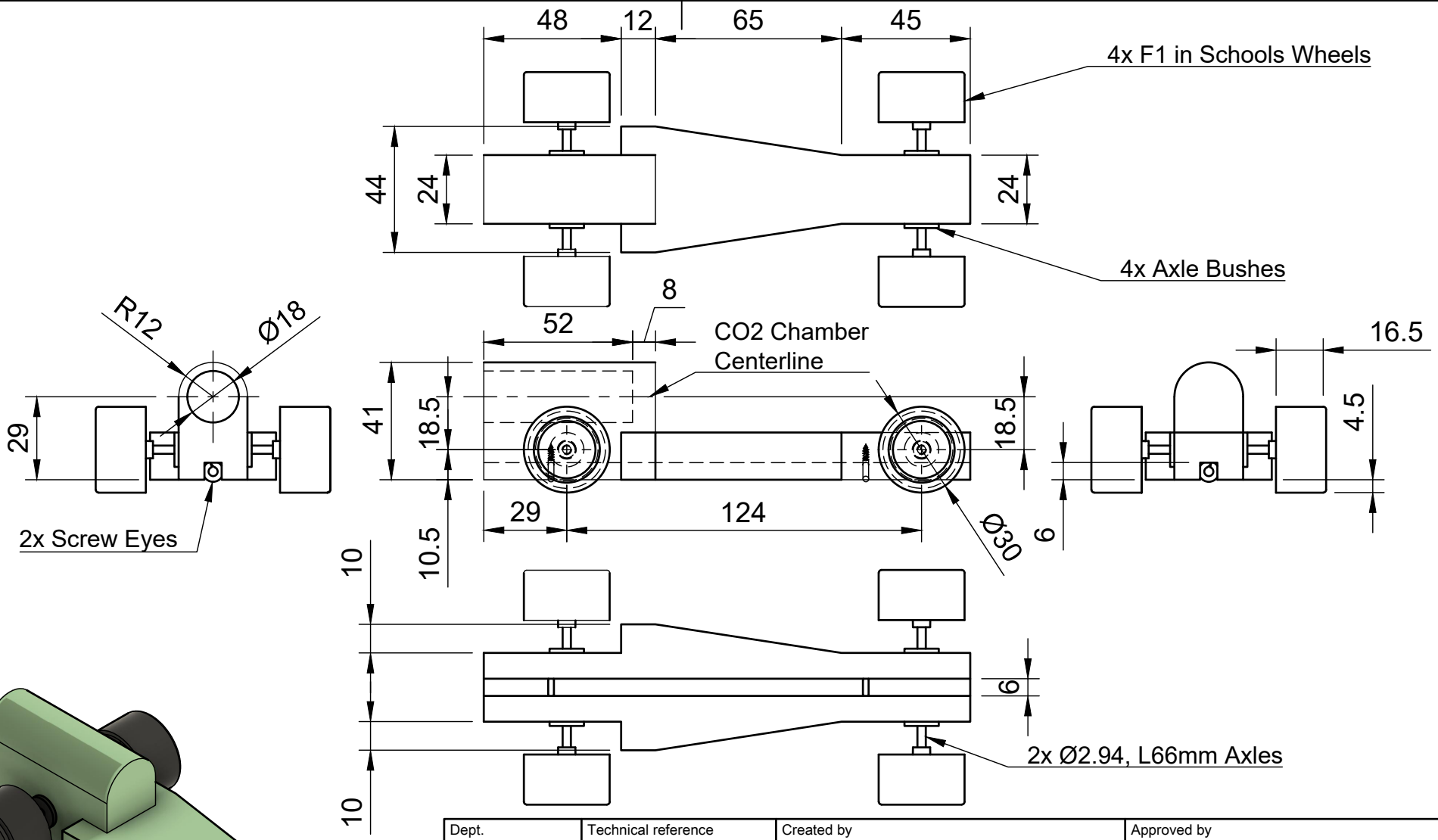

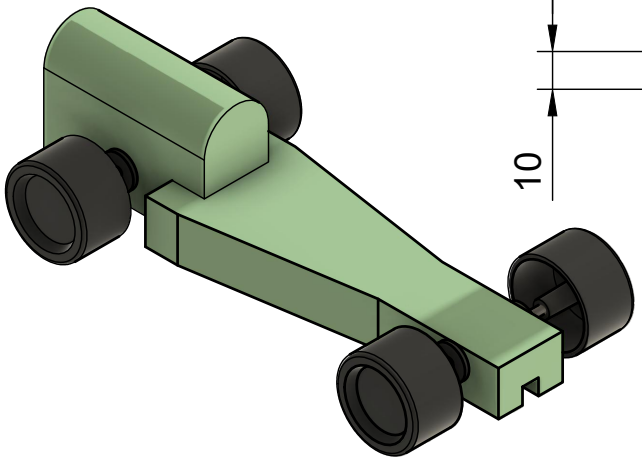

Dept. BU	Technical reference	Created by NM 19/07/2020	Approved by Yas in Schools
		Document type	Document status Released
		Title Test Driver Template	DWG No. TDT01
			Rev. 02 / Date of issue 26/10/2020 / Sheet 1/1