F1 in Schools

United Arab Emirates

Presented by

ADNOC

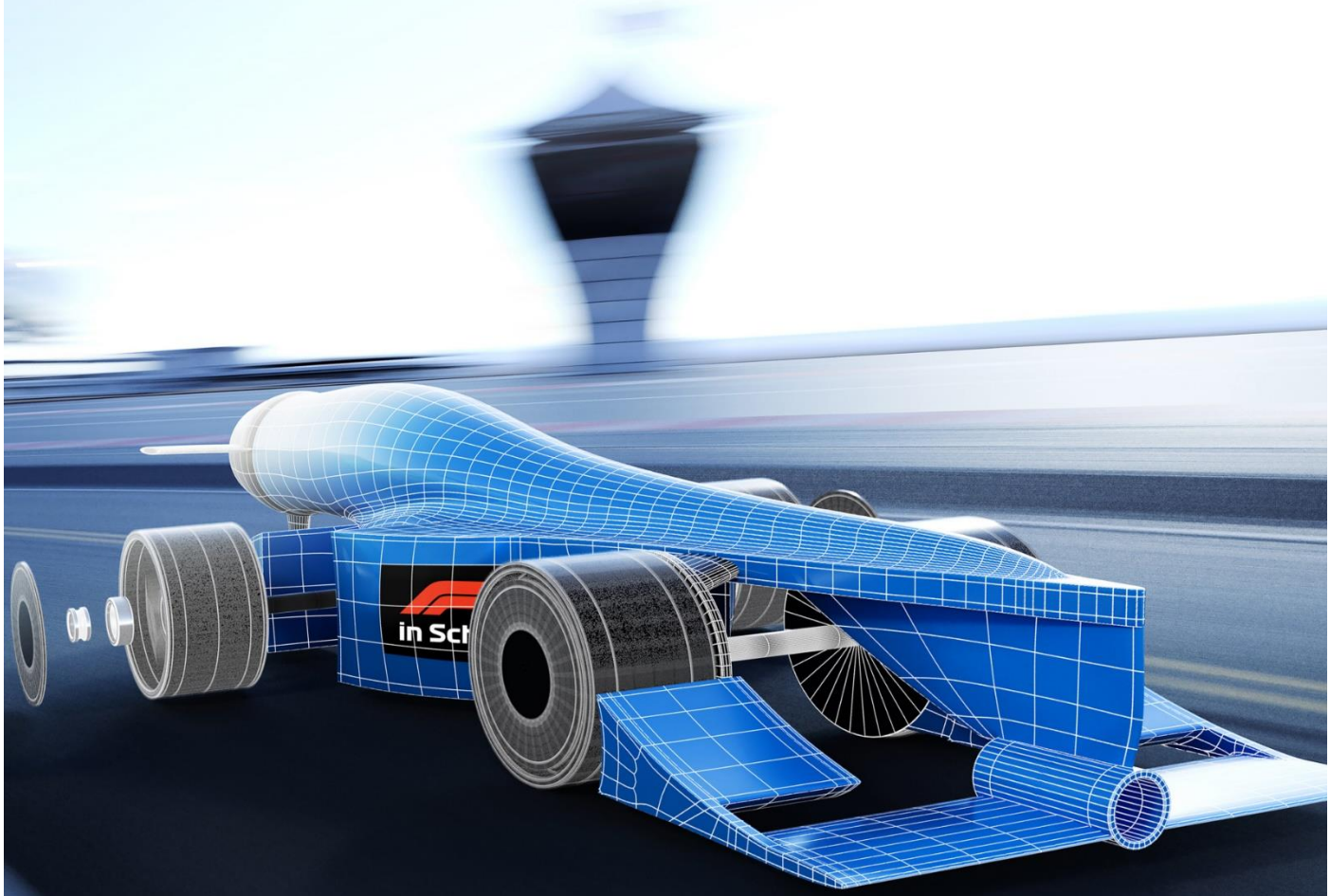

2022

TEST DRIVER CHALLENGE

Amendments made on **(DATE)** are indicated **thus** (using red underlined text).

CONTENTS

ARTICLE T1 – DEFINITIONS **4**

T1.1 F1 IN SCHOOLS TEST DRIVER CAR 4
T1.2 FULLY ASSEMBLED CAR 5
T1.3 BODY 5
T1.4 CO2 CYLINDER CHAMBER 5
T1.5 WING 5
T1.6 WING SUPPORT STRUCTURE 5
T1.7 NOSE CONE 6
T1.8 TEST DRIVER CHALLENGE WHEEL 6
T1.9 WHEEL SUPPORT SYSTEM 6
T1.10 TETHER LINE SLOT 6
T1.11 TETHER LINE GUIDE 6
T1.12 SURFACE FINISH AND DECALS 6
T1.13 F1 IN SCHOOLS™ LOGO DECAL 6
T1.14 HAND FINISHING 6
T1.15 OFFICIAL F1® MODEL BLOCK 6
T1.16 VERTICAL REFERENCE PLANE 7

ARTICLE T2 – GENERAL PRINCIPLES **7**

T2.1 REGULATIONS DOCUMENTS 7
T2.2 INTERPRETATION OF THE REGULATIONS 7
T2.3 AMENDMENTS TO THE REGULATIONS 7
T2.4 SAFE CONSTRUCTION 7
T2.5 COMPLIANCE WITH REGULATIONS 7
T2.6 CRITICAL TECHNICAL REGULATIONS 8
T2.7 DESIGN IDEAS AND REGULATION COMPLIANCE QUESTIONS. 8
T2.8 MEASUREMENTS 8

ARTICLE T3 – FULLY ASSEMBLED CAR **8**

T3.1 DESIGN, MANUFACTURE AND CONSTRUCTION – [CRITICAL REGULATIONS] 8
T3.2 FINISHING – [PENALTY – 6PTS EACH] 8
T3.3 UNDEFINED FEATURES – [CRITICAL REGULATION | PENALTY – 6PTS] 8
T3.4 OVERALL LENGTH – [CRITICAL REGULATION | PENALTY – 6PTS] 9
T3.5 TOTAL MINIMUM WEIGHT – [CRITICAL REGULATION | PENALTY – 6PTS] 9
T3.6 TRACK CLEARANCE – [PENALTY – 6PTS] 9
T3.7 STATUS DURING RACING - [PENALTY – 6PTS] 9

ARTICLE T4 – BODY **9**

T4.1 BODY CONSTRUCTION – [CRITICAL REGULATION | PENALTY – 6PTS] 9
T4.2 CAR BODY CORE – [CRITICAL REGULATION | PENALTY – 6PTS] 9
T4.3 IMPLANTS – [PENALTY – 6PTS] 10

ARTICLE T5 – TETHER LINE SLOT **10**

T5.1 LOCATION 10

ARTICLE T6 – TETHER LINE GUIDES **10**

T6.1 LOCATION – [CRITICAL REGULATION | PENALTY – 6PTS] 10

ARTICLE T7 – WHEELS **10**

T7.1 NUMBER AND LOCATION – [CRITICAL REGULATION | PENALTY – 6PTS] 10
T7.2 VISIBILITY FROM TOP AND SIDE – [CRITICAL REGULATION | PENALTY – 6PTS] 10

T7.4 WHEEL SUPPORT SYSTEMS – [CRITICAL REGULATION | PENALTY – 6PTS] 10
T7.5 ROTATION – [CRITICAL REGULATION | PENALTY 6PTS] 11

ARTICLE T8 – NOSE CONE 11

T8.1 CONSTRUCTION – [PENALTY 6PTS] 11

ARTICLE T9 – WING AND WING SUPPORT STRUCTURE 11

T9.1 DESCRIPTION AND PLACEMENT – [CRITICAL REGULATION | PENALTY – 6PTS] 11
T9.2 REAR WING LOCATION – [PENALTY – 6PTS] 11

T9.4 REAR WING HEIGHT – [PENALTY – 6PTS] 11
T9.5 FRONT WING LOCATION – [PENALTY – 6PTS] 12
T9.6 FRONT AND REAR WINGSPAN – [PENALTY – 3PTS EACH] 12
T9.7 SPAN SEGMENTS – [PENALTY – 3PTS] 12
T9.8 FRONT AND REAR WING CHORD – [PENALTY – 2PTS EACH] 12
T9.9 FRONT AND REAR WING THICKNESS – [PENALTY – 2PTS EACH] 13

APPENDIX – OTHER ILLUSTRATIONS 13

I. OFFICIAL F1® MODEL BLOCK DIMENSIONS AND SPECIFICATION 14

ADVICE

Throughout this document you will find 'ADVICE' sections, like this one. These will help you better understand the regulations. The F1 in Schools Competition is very hotly contested and hence over the years the rules have become quite detailed. This regulations document is written just like the technical regulations that real Formula One® teams must comply with. Like on a real F1® team, it's very important you have a thorough understand of the technical regulations

ARTICLE T1 – DEFINITIONS

T1.1 F1 in Schools Test Driver Car

ADVICE
Your car can not have any parts on it which aren't covered by this list of components

This is also referred to as 'the car'. Designed and manufactured according to these regulations for the purpose of participating in races on the F1 in Schools™ track at the UAE National Finals event, powered only by a single gas cylinder containing 8 grams of pressurised CO2. F1 in Schools cars are designed to travel the 20-metre race distance as quickly as possible, whilst withstanding the forces of launch acceleration, track traversing and physical deceleration after crossing the finishing line.

An F1 in Schools car assembly must only consist of the following components:

- A body designed around the test driver body template
- A CO2 cylinder chamber
- A front wing & nose cone assembly
- A rear wing
- Standard F1 in Schools Wheels, Axles & Axle Guides
- A tether line slot as per the test driver body template
- Standard F1 in Schools Tether line guides
- Surface finishing E.g. Paint and / or decals (optional)

Adhesives with no dimensional impact are permissible for joining components.

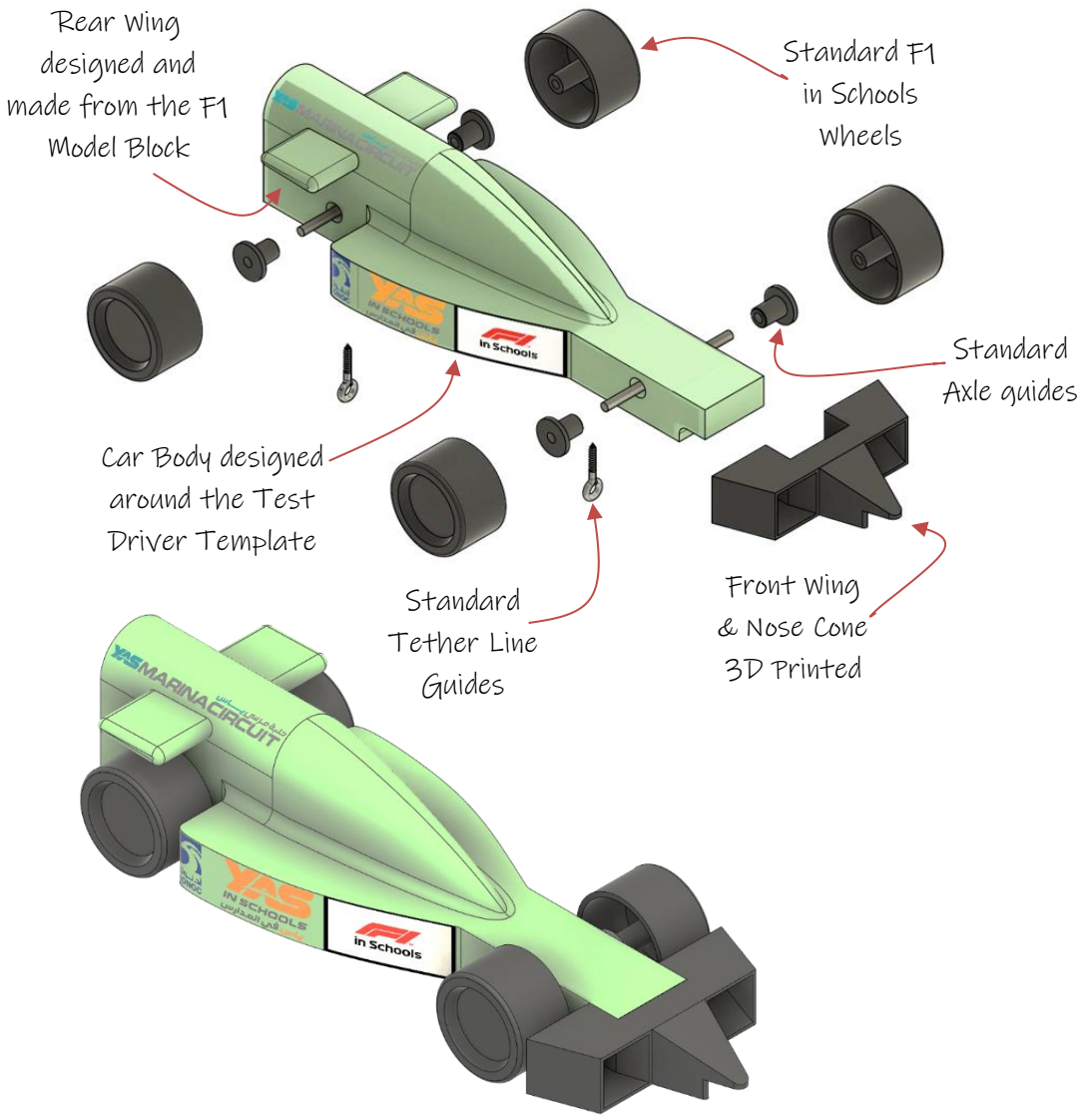

T1.2 Fully assembled car

An F1 in Schools car, without a CO2 cylinder inserted, presented ready for racing, resting on the track surface, free of any external force other than gravity.

T1.3 Body

A solid uninterrupted piece of F1® Model Block existing rear of the front axle centre line and encompassing the CO2 cylinder chamber. For dimensional purposes the body also includes any attached decals and surface finishes. Any F1® Model Block forward of the front axle centre line is not defined as car body.

ADVICE
Your car may also have the nose cone and wings made from the standard model block, but for the purpose of this definition, the car body is only the model block material that is rear of the front axle

T1.4 CO2 cylinder chamber

A circular cylinder of clear space bounded along its side and one end by car body only. This is where the CO2 gas cylinder is placed for racing.

T1.5 Wing

A wing on an F1 in Schools car is an aerodynamic feature that permits airflow around ALL of its surfaces including its features of a leading and trailing edge. A wing is dimensionally defined by the maximum and minimum span, chord and thickness. In engineering terms, the vertical cross-sectional shape of the wing, parallel to the direction of car travel, is referred to as an aerofoil.

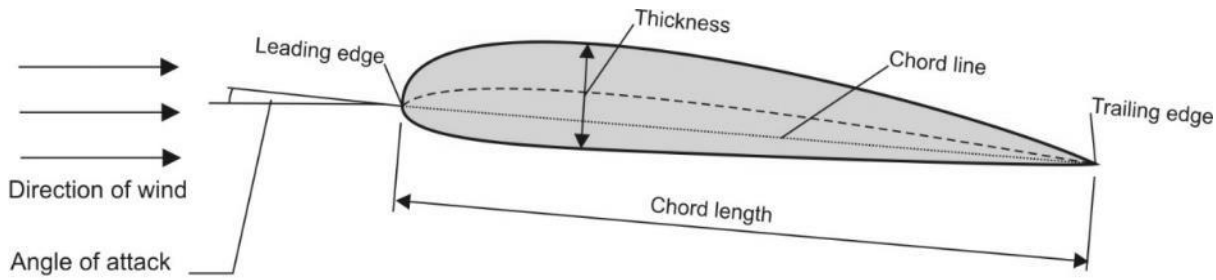

Wing cross-section / aerofoil nomenclature

T1.6 Wing support structure

Is a feature, other than wing, car body or nose cone that joins a wing surface to another component of the car assembly.

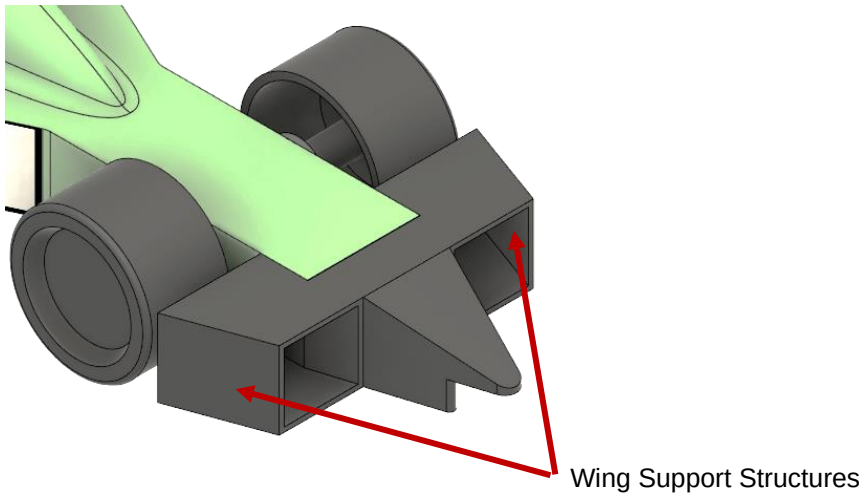

T1.7 Nose cone

The nose cone is any component of the car, other than wheel, wheel support system, wing or wing support structure, that exists forward of the front axle centre line. This includes any F1® Model Block material that continues forward of the front axle centre line.

T1.8 Test Driver Challenge Wheel

A wheel is the single part as supplied by Yas in Schools, cylindrical in form, with its maximum circumference contacting the track surface, enabling motion of the car through rotation

T1.9 Wheel support system

Test Driver Challenge Wheel support systems are supplied by Yas in Schools and consist of assembly of steel axle and plastic axle guide. The wheel support system is shown at T1.1.

T1.10 Tether line slot

The tether line slot is a rectangular prism of clear space that is bounded by solid model block material on three sides of its length. The slot features as standard on the official F1® Model Block

ADVICE
Turn to the picture of the standard F1® Model Block in the appendix to see the tether line slot.

T1.11 Tether line guide

A tether line guide is a key safety component that completely surrounds the track tether line so as to safely connect the car to the tether line during races. Test Driver Challenge cars must use the 'screw eye' tether line guides supplied by Yas in Schools. These can be seen at T1.1

T1.12 Surface finish and decals

A surface finish on an F1 in Schools car is considered to be any applied visible surface covering, of uniform thickness over the profile of a car component. Surface finishes are optional for Test Driver Challenge Cars. A decal is material adhered to a component or surface finish. To be defined as a decal, 100% of the area of the adhering side must be attached to a surface. Surface finishes and decals are included when measuring the dimensions of any components they feature on.

T1.13 F1 in Schools™ logo decal

This consists of the F1 in Schools™ logo graphic printed on either black or white adhesive vinyl with a horizontal dimension of 30mm and vertical dimension of 15mm. Official decals are supplied by F1 in Schools UAE at event registration.

OR

T1.14 Hand finishing

Hand finishing is defined as use of a hand powered device (e.g. abrasive paper) for removing only the irregularities that may remain on a CNC machined surface of the car body. These irregularities are often referred to as 'scalloping marks'.

T1.15 Official F1® Model Block

The official F1® Model Block is a homogenous piece of medium density foam material, pre-machined to the dimensions as shown by diagrams in the appendix of this document.

ADVICE
Go to the appendix and review the F1® Model Block. It's super critical that you understand the dimensions of the block before you start designing your car!

T1.16 Vertical reference plane

To assist with describing dimensions, it is assumed that an invisible plane exists two dimensional along the length of the CO2 cylinder chamber centre axis and perpendicular to the track surface. This is known as the vertical reference plane.

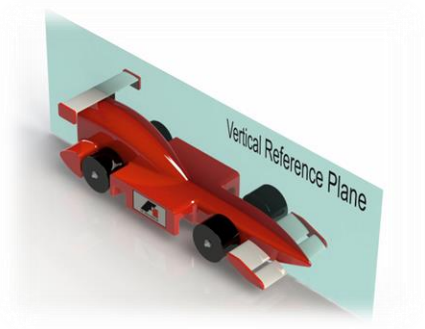

ARTICLE T2 – GENERAL PRINCIPLES

T2.1 Regulations documents

T2.1.1 F1 in Schools UAE issues the regulations, their revisions and amendments made.

T2.1.2 UAE Technical Regulations - This document. The Technical Regulations document is mainly concerned with those regulations that are directly related to F1 in Schools car design and manufacture. Technical Regulation article numbers have a 'T' prefix.

T2.1.3 UAE Competition Regulations – A document separate to this one which is mainly concerned with regulations and procedures directly related to judging and the competition event. Competition Regulation article numbers have a 'C' prefix.

T2.2 Interpretation of the regulations

T2.2.1 The final text of these regulations is in English should any dispute arise over their interpretation. The text of a regulation, diagrams and any related definitions should be considered together for the purpose of interpretation.

T2.2.2 Text clarification - Any questions received that are deemed by F1 in Schools UAE to be related to regulation text needing clarification will be answered by F1 in Schools UAE The question received, along with the clarification provided by F1 in Schools UAE, may be published to all competing teams at the same time.

T2.3 Amendments to the regulations

Any amendments will be announced and released by F1 in Schools UAE by email notification to all participating schools. Any amended text will be indicated **thus** (using red underlined text) in any revision of this document

T2.4 Safe construction

T2.4.1 All race cars will be inspected closely to ensure that they are engineered and constructed safely for the purpose of racing. High importance is placed on ensuring that tether line guides are robust and secure. If the Judges rule an aspect of the race car to be unsafe for racing, the team / entrant will be given an opportunity to rectify this.

T2.4.2 During racing – The race Officials will routinely inspect cars for safety during scheduled races. If the Officials rule a car to be unsafe, the team entrant will be given an opportunity to make repairs. Repairs of this nature will incur a 5-point penalty.

T2.5 Compliance with regulations

Points are deducted for non-compliance with the technical regulations as per the specification judging score card. Several regulations have been identified as 'critical regulations'.

T2.6 Critical technical regulations

T2.6.1 Regulations identified as a critical technical regulations are listed in this article. If a team's / entrant's race car is judged as being NON-COMPLIANT with any critical technical regulation they will be INELIGIBLE for the following awards:

- Test Driver Challenge Winner
- Test Driver Challenge Fastest Car

T2.6.2 The critical technical regulations are articles:

T3.1 / T3.3 / T3.4 / T3.5 / T4.1 / T4.2 / T6.1 / T7.1 / T7.2 / T7.4 / T7.5 / T9.1

ADVICE
As per the name, Critical regulations are the most important regulations. You MUST ensure that you don't break any of these rules which are all highlighted in yellow!

T2.7 Design ideas and regulation compliance questions.

Teams are not permitted to seek a ruling from F1 in Schools UAE or any competition officials or judges before the event as to whether a design idea complies with these regulations. Rulings will only be made by the Judges at the UAE National Finals event. Design compliance to the regulation's forms part of the competition.

T2.8 Measurements

T2.8.1 Tolerance when measuring all dimensions is +/- 0.5mm unless otherwise stated.

T2.8.2 Tolerance when measuring weight is +/- 0.5grams.

T2.8.3 Dimensional measures - All car component dimensions are inclusive of any applied paint finish or decal.

T2.8.4 Weight measures – all weight measurements will be made using the UAE F1 in Schools electronic competition scales which are accurately calibrated to +/- 0.1 gram.

ADVICE
The term 'tolerance' means that you have a margin of accuracy to comply within.

ADVICE
To help ensure that you don't break rules, don't design your car to the size limits. Leave yourself some room for manufacturing and assembly error.

ARTICLE T3 – FULLY ASSEMBLED CAR

T3.1 Design, manufacture and construction – [Critical regulations]

T3.1.1 All F1 in Schools™ cars must be designed and engineered using CAD (Computer Aided Design) and CAM (Computer Aided Manufacture) technology. CAD software used should provide for 3D part modelling, assembly and 3D realistic rendering.

T3.1.2 The body of all F1 in Schools Test Driver Cars must be manufactured via material removal using a CNC router/ milling machine.

ADVICE
Research CNC 3 axis machining. F1 in Schools UAE will use a 3 axis CNC machine to manufacture your car. Sometimes teams try to create very complex shapes which can't always be accessed by the machines cutting tool.

T3.2 Finishing – [Penalty – 6pts each]

T3.2.1~~1.3~~ Hand finishing of the car assembly is permitted. Refer ARTICLE 1.14

T3.3 Undefined features – [Critical regulation | Penalty – 6pts]

The car assembly must only consist of components listed in ARTICLE 1.1.

T3.4 **Overall length** – [Critical regulation │Penalty – 6pts]

This is measured parallel to the track surface and vertical reference plane, between the front and rear extremities of the assembled car.

Min: 170mm / Max: 210mm

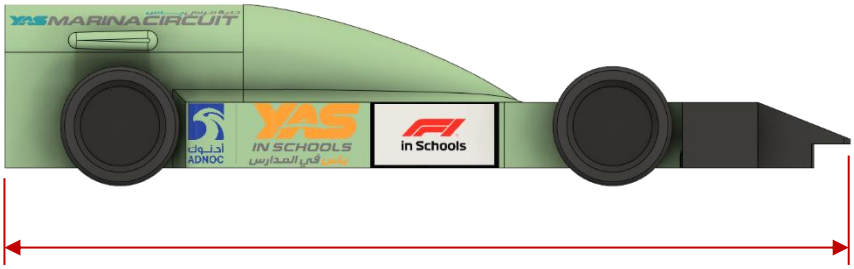

Overall Length

T3.5 **Total Minimum Weight –** [Critical regulation │Penalty – 6pts]

Total weight is the weight of the car excluding a CO2 gas cylinder. If ruled underweight, ballast will be added before racing, at 2 grams for every gram underweight.

Minimum: 55 grams

T3.6 **Track clearance – [Penalty – 6pts]**

Distance between track surface and any car component, except the rolling surface of a wheel. Measured normal to the track surface

Min: 2mm

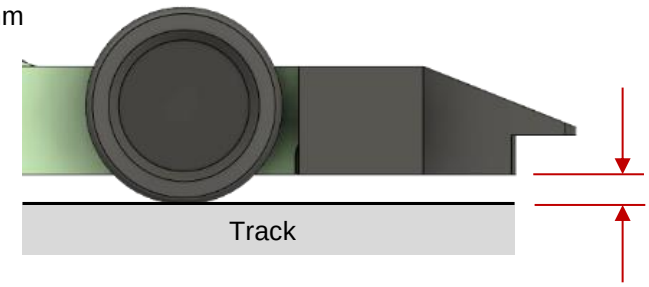

T3.7 **Status during racing** - [Penalty – 6pts]

The car assembly must be designed so that no items other than CO2 cylinders are removed, replaced or added to the assembly during scheduled race events.

ARTICLE T4 – BODY

T4.1 **Body construction** – [Critical regulation │Penalty – 6pts]

The body must be constructed from a single continuous piece of CNC manufactured F1® Model Block

T4.2 **Car Body Core** – [Critical regulation │Penalty – 6pts]

Car bodies must be designed around the Car Body Core, included with the Test Driver Car Template assembly. Material can only be added to the top, left side, right side and front surfaces of the core. **When modelling designs, no material can be removed from the Car Body Core template.**

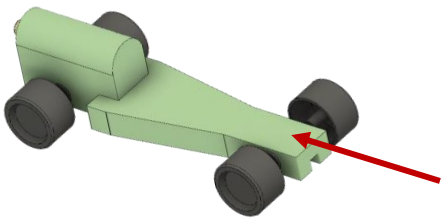

Template Car Body Core Shown as Green

ADVICE
All parts of your car that are to be made from the Model Block must be designed to fit within the dimensions of the standard block. This includes the body and rear wing features. See the appendix to find the model block dimensions. The block is 65mm wide and 50mm high

T4.3 Implants – [Penalty – 6pts]

No implants / foreign objects are permitted in the car body

ARTICLE T5 – TETHER LINE SLOT

T5.1 Location

All test Driver Cars must include a tether line slot as per the Test Driver Car Template

ARTICLE T6 – TETHER LINE GUIDES

T6.1 Location – [Critical regulation | Penalty – 6pts]

Each car must have two (2) tether line guides firmly secured in the tether line slot, one rear of the rear axle and the other forward of the front axle. The tether line guides must be those supplied by Yas in Schools.

ADVICE

Your car will be secured to the racetrack via monofilament (fishing) line that runs the full length of the racetrack. The line is threaded through the tether guides before racing. A standard set of screw eyes are supplied with your car kit

ARTICLE T7 – WHEELS

T7.1 Number and location – [Critical regulation | Penalty – 6pts]

The car assembly must include 4 standard F1 in Schools wheels, two at the front and two at the rear. **The location of the wheel / axle centre lines MUST remain the same as they are located on the Test Driver Car Template.**

T7.2 Visibility from top and side – [Critical regulation | Penalty – 6pts]

The front wheels must be completely visible when viewed from their respective side and top views. The rear wheels must be completely visible when viewed in their respective side views.

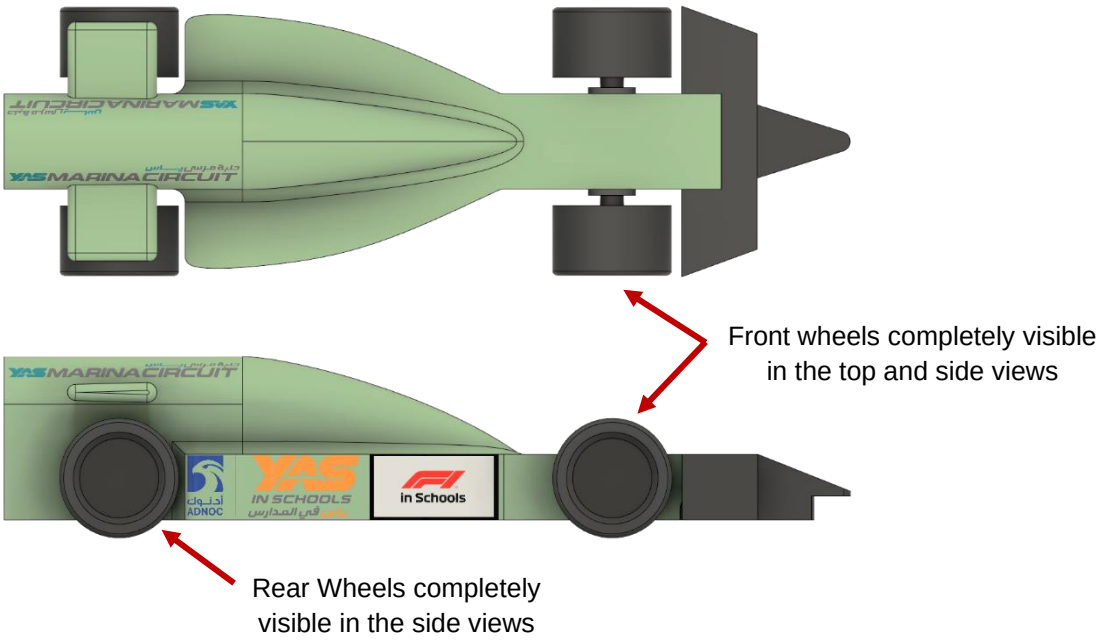

T7.4 Wheel support systems – [Critical Regulation | Penalty – 6pts]

Test Driver Challenge Cars must use the two axles and four axle guides as supplied by F1 in Schools and as included with the Test Driver Car template 3D CAD assembly

T7.5 **Rotation** – [Critical regulation | Penalty 6pts]

All four wheels must rotate freely about their own centre axis to facilitate motion of the car during racing.

ARTICLE T8 – NOSE CONE

T8.1 **Construction** – [Penalty 6pts]

The nose cone can only be manufactured from F1 Model Block and / or 3D printed Material

ARTICLE T9 – WING AND WING SUPPORT STRUCTURE

T9.1 **Description and placement** – [Critical regulation | Penalty – 6pts]

The design of the car should resemble an actual F1 car through the inclusion of a wing on the front nose of the car and a wing at the rear of the car. Each wing must have a leading edge and a trailing edge. Refer to definition at ARTICLE 1.5.

ADVICE
Wing rules are the most complex. Read them and the definition at T1,5 carefully.

T9.2 **Rear wing location** – [Penalty – 6pts]

The whole of the rear wing must be behind the forward most part of rear wheel rear when viewed in the side elevation.

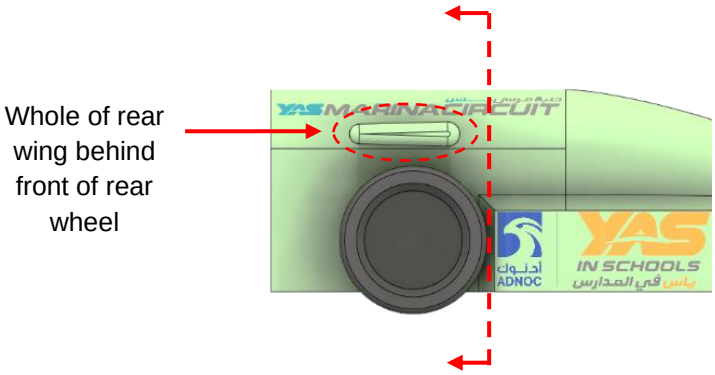

T9.4 **Rear wing height** – [Penalty – 6pts]

The bottom surface of the rear wing must be higher than the highest part of the rear wheel.

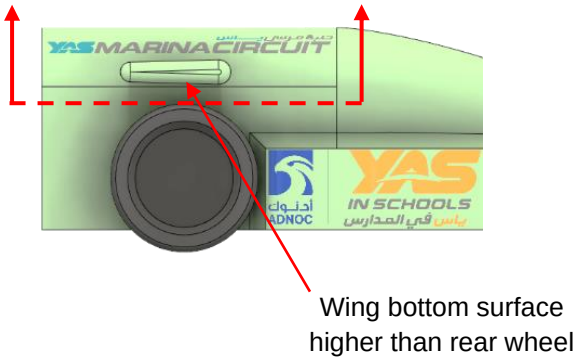

T9.5 Front wing location – [Penalty – 6pts]

The whole of the front wing and any support structure must be forward of the front wheel when viewed from the side

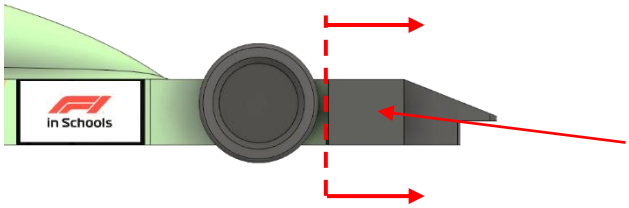

Whole of front wing forward of front wheel

T9.6 Front and rear wingspan – [Penalty – 3pts each]

Where a wingspan is intersected by another part of the car, the total span is the sum of each segment. The wingspan is measured on the top or bottom surface of the wing, whichever is shortest, and measured 90 degrees to the vertical reference plane.

T9.6.1 Front wingspan - Min: 40mm

T9.6.2 Rear wingspan – Min 40mm

ADVICE
Check definition at T1.5. A wing must allow clear airflow around all its surfaces. Only surfaces with this clear airflow can be included in wing dimension calculations

T9.7 Span segments – [Penalty – 3pts]

The span of a wing can be intersected by the car body, nose cone or wing support structure to form span segments. All span segments must conform to the wing chord and thickness regulations. The wing segments must be no less than the minimum size.

Min segment size: 20mm

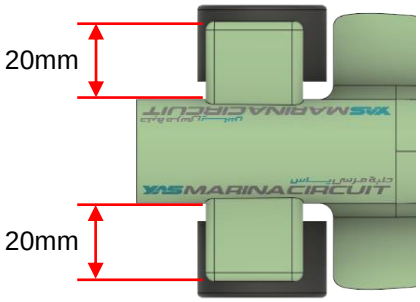

Rear Wing Example
20 + 20 segments = 40mm span

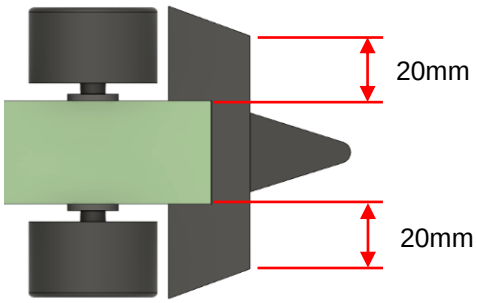

Front Wing Example
20 + 20 minimum segments = 40mm span

T9.8 Front and rear wing chord – [Penalty – 2pts each]

The wing chord minimum and maximum dimensions must exist throughout the actual wing minimum span. The chord is the distance between the leading edge and trailing edge measured parallel to the vertical reference plane.

T10.11.1 Front wing chord - Min: 15mm / Max: 25mm

T10.11.2 Rear wing chord – Min 15mm / Max 25mm

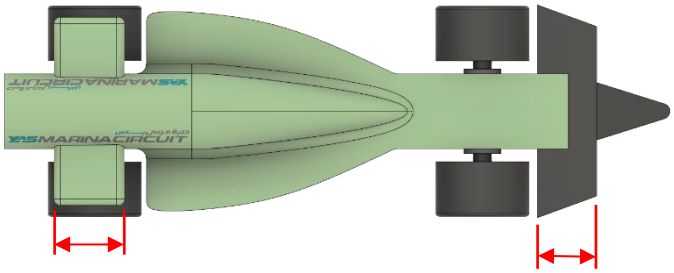

Rear Wing Chord

Front Wing Chord

T9.9 Front and rear wing thickness – [Penalty – 2pts each]

The wing thickness minimum and maximum dimensions must exist throughout the wings minimum span, measured perpendicular to the chord line.

T9.9.1 Front wing thickness - Min: 1.5mm / Max: 6mm

T9.9.2 Rear wing thickness – Min 4mm / Max 8mm

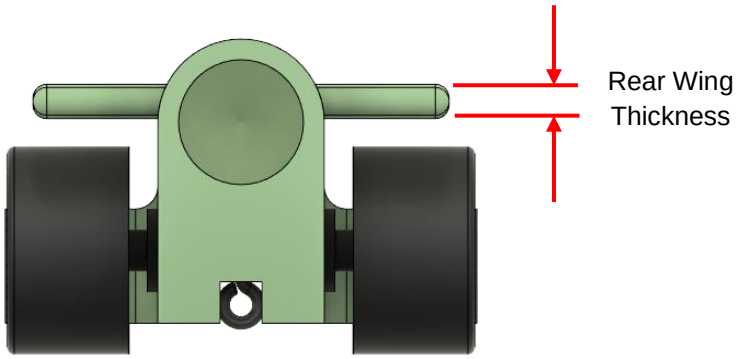

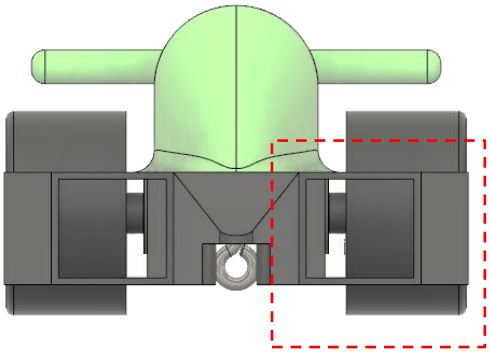

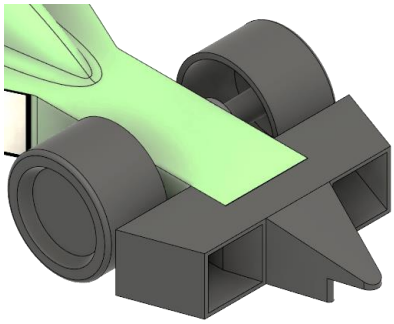

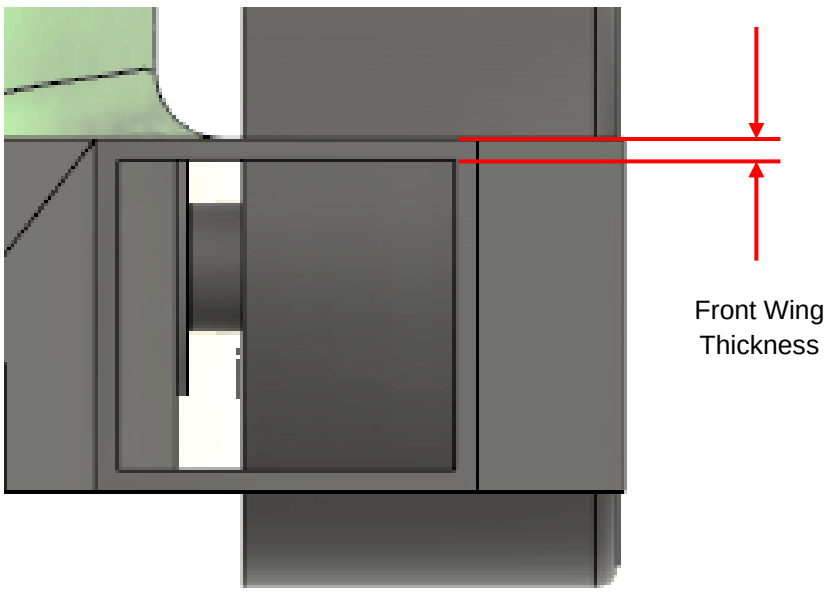

APPENDIX – OTHER ILLUSTRATIONS

1. The Test Driver Challenge Car Template

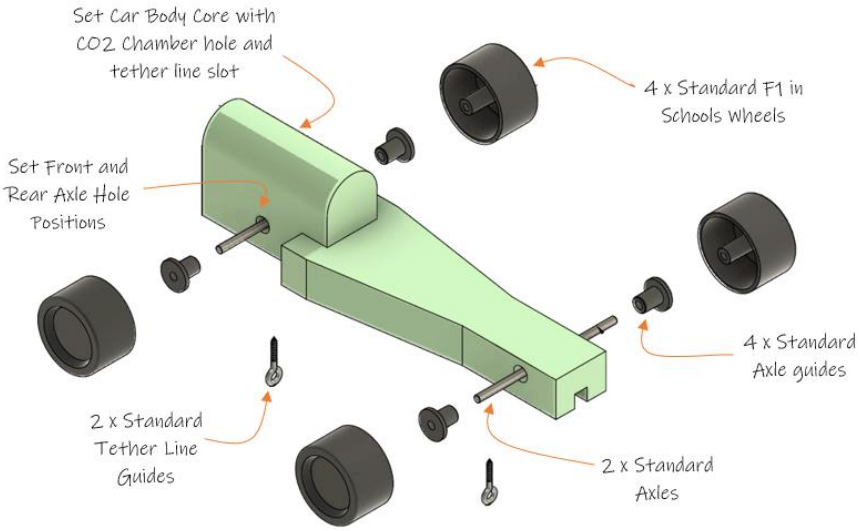

2. Official F1® Model Block dimensions and specification

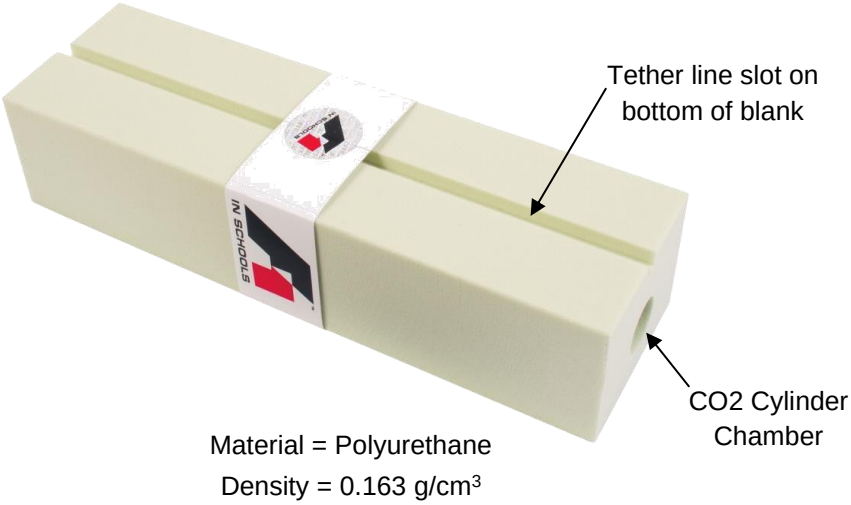
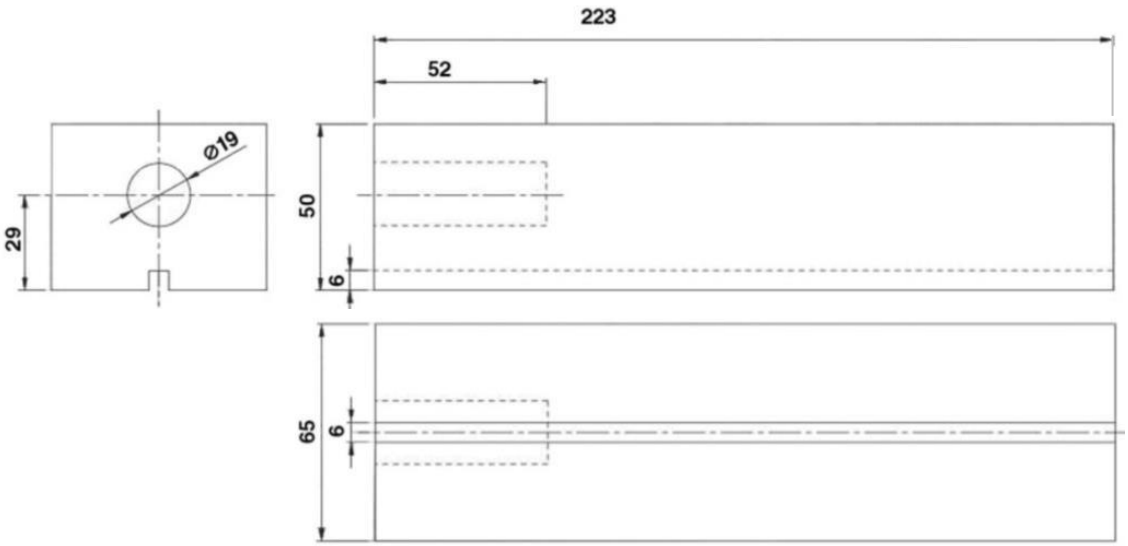
Below: Orthographic projection of F1® Model Block. All dimensions shown in millimetres